HSF Pb RoHS

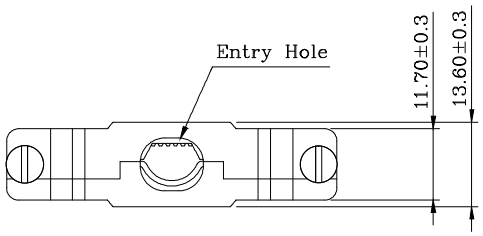

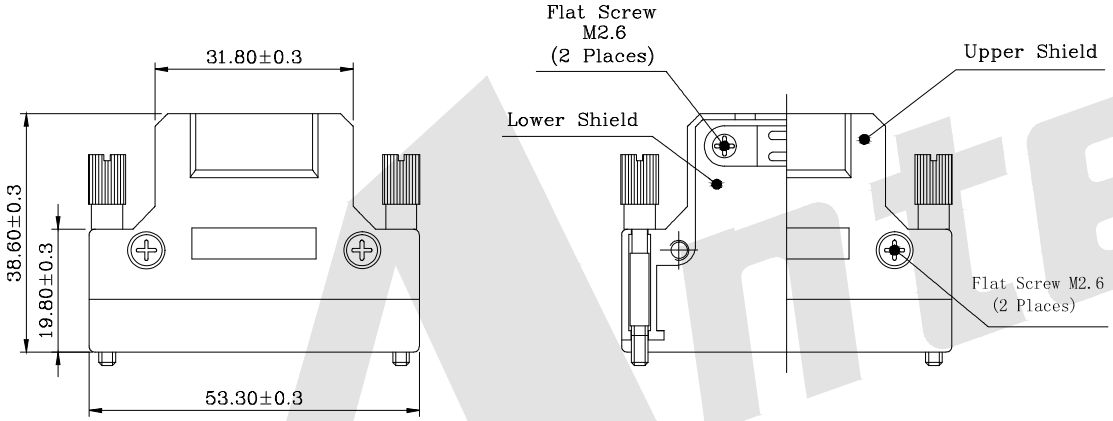

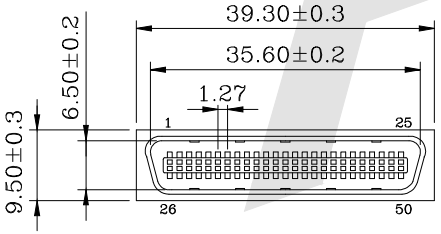

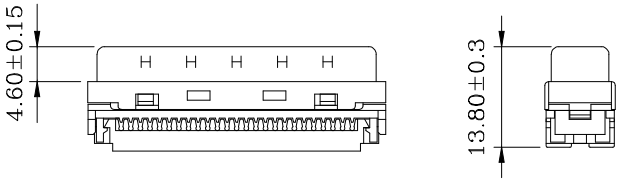

FEATURES:
- Round cable Straight exit
- Strain Relief Straple With Jackscrew
- Back shell desing by Die-Cast
- Excellent EMI/RFI protection

MATERIALS:
- Back Shell:Zinc plate nickel over copper
- Spring latches:phosphor bronze over nickel
- Screw:stell nickel plated over copper
- Cable Clipper:stell nickel plated

HPMCS01CNI-50X-X
①②

①ENTRY HOLE SIZES
9=9.0 mm
11=11.0 mm

②Threaded Finishes:
1:Threaded Insert #2-56
2:Threaded Insert #4-40
3:Threaded Insert M2.6

Antenk

REV	DESCRIPTION	DATE

Unless Otherwise specified tolerance
X. ±0.35 X.XX:±0.20
X.X:±0.25 X.XXX:±0.15

SCALE: As Shown	UNIT: mm
DRAW Jack Bao	DATE 8/23/2018
CHECK Bob Yang	DATE 8/23/2018

3rd ANGLE PROJECTION

ANTENK ELECTRONICS CO,.LTD
Http://www.antenk.com
E-mail:sales@antenk.com

TITLE: 1.27mm Series Shielded Backshell Kits 50P Straight Exit With Jackscrew and Connector IDC Molded Ribbon Type

DRAWING NO: HPMCS01CNI-50XX

PRODUCT NO: HPMCS01CNI-50XX